# Parts Catalog



**GG60TG**

# Gas Cooking Equipment
# Griddle
## Model: GG60TG

08/07/2023 Rev. C
IMPORTANT!
TO EXPEDITE SHIPMENT OF PARTS, ALWAYS SPECIFY MODEL, REV, PART NUMBER, AND SERIAL NUMBER OF UNIT.


## GLOBE FOOD EQUIPMENT COMPANY
2215 East River Road
Dayton, Ohio 45439

**Parts Department**
Toll Free 1-800-745-6238
E-Mail: info@globefoodequip.com
Website: www.globefoodequip.com

Not for resale

**© Globe Food Equipment Company, 2023**

# Table of Contents


| Description | Page |
| --- | --- |
| GG60TG Thermostatic Griddle Components | 4 |
| GG60TG Gas Orifice Elevation Chart | 6 |

# GG60TG Thermostatic Griddle Components

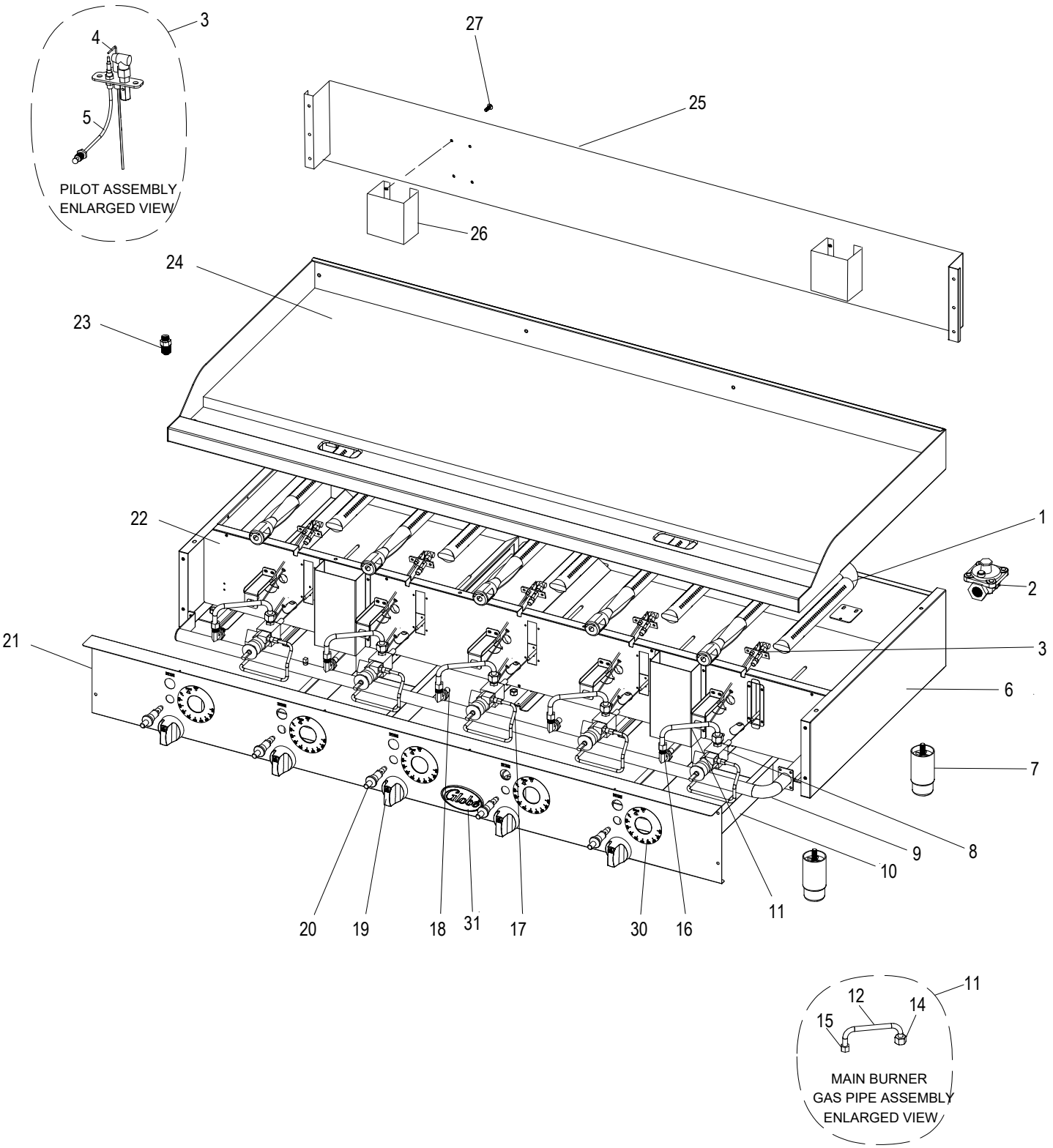




© Globe Food Equipment Company

# GG60TG Thermostatic Griddle Components

| Item | Part Number | Description | Qty | Serial Number |
|---|---|---|---|---|
| 1 | U06051470672 | "U" Shaped Burner | 5 | |
| 2 | U01221069501 | Regulator | 1 | |
| 3 | U00677 | Pilot Assembly (Incl. items 4-5) | 5 | |
| 4 | U02483 | Thermocouple | 1 | |
| 5 | U03991290123 | Piezo Ignition Assembly | 1 | |
| 6 | | Main Enclosure, Lower | 1 | |
| 7 | U01021005165 | Foot | 4 | |
| 8 | U01201068510 | Thermostatic Valve | 5 | |
| 9 | | Manifold Assembly | 1 | |
| 10 | U00811 | Drip Tray | 2 | |
| 11 | U01079 | Gas Pipe Kit (Incl. items 12-15) | 5 | 1616107872 -> |
| 12 | | Main pipe | 1 | |
| 13 | | Copper Cover (Not Shown) | 2 | |
| 14 | | Nut M16 | 1 | |
| 15 | | Nut M14 | 1 | |
| 16 | U01080 | Injector Connection | 5 | |
| 17 | U01500 | Pilot Pipe Kit | 5 | 1616107872 -> |
| 18 | U01201068641 | Hood Orfice #41 | 5 | |
| 18 | U01201068651 | Hood Orfice #51 | 5 | |
| 18 | U06051470839 | Hood Orfice #43 | 5 | |
| 18 | U06051470824 | Hood Orifice #52 | 5 | |
| 18 | U06051470869 | Hood Orfice #44 | 5 | |
| 18 | U06051470899 | Hood Orfice #45 | 5 | |
| 18 | U06051470884 | Hood Orfice #53 | 5 | |
| 18 | U06051470929 | Hood Orfice #47 | 5 | |
| 19 | U01505 | Control Knob | 5 | |
| 20 | U03991290085 | Piezo Ignition Button | 5 | |
| 21 | U03033 | Front Panel | 1 | |
| 22 | | Isolating Plate, Front | 1 | |
| 23 | U01201068513 | Pilot Injector (NG) | 5 | |
| 23 | U01201068512 | Pilot Injector (LPG) | 5 | |
| 24 | | Griddle Plate Assembly | 1 | |
| 25 | U01501 | Rear Panel Purchase with * | 1 | |
| 26 | U01032 | Bracket * | 2 | |
| 27 | U01075 | Screw * | 8 | |
| 28 | | Isolating Plate, Lower (Not Shown) | 1 | |
| 29 | | Isolating Plate, Lower (Not Shown) | 1 | |
| 30 | U01920 | Overlay | 1 | |
| 31 | U01021005383 | Globe Badge | 1 | |
| 32 | | Copper Cover (Not Shown) | 1 | |



© Globe Food Equipment Company

# GG60TG Gas Orifice Elevation Chart

| Model | Rated Input Per Burner (BTU/HR) | Elevation | | Elevation | |
|---|---|---|---|---|---|
| | | 0-2000 ft | | 2000 - 4000 ft | |
| | | Nat | LP | Nat | LP |
| Griddle | 30000 | U01201068641 (#41) | U01201068651 (#51) | U06051470839 (#43) | U06051470824 (#52) |

| | | Elevation | | Elevation | |
|---|---|---|---|---|---|
| | | 4000 - 6000 ft | | 6000 - 8000 ft | |
| | | Nat | LP | Nat | LP |
| Griddle | 30000 | U06051470869 (#44) | U06051470824 (#52) | U06051470899 (#45) | U06051470884 (#53) |

| | | Elevation | | Pilot<br>For Thermostatic Griddle Only | |
|---|---|---|---|---|---|
| | | 8000 - 10000 ft | | All Elevations | |
| | | Nat | LP | Nat | LP |
| Griddle | 30000 | U06051470929 (#47) | U06051470884 (#53) | U01201068513 (.45mm) | U01201068512 (.25mm) |



© Globe Food Equipment Company